HAVANT

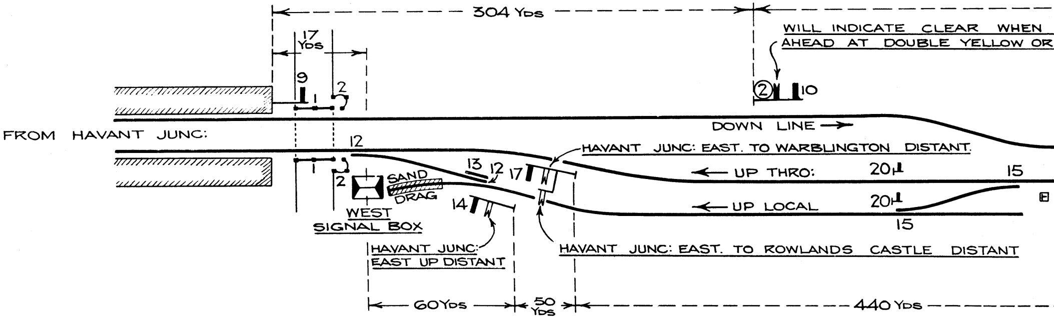
304 YDS
17 YDS
9
2
1
2
1
2
WILL INDICATE CLEAR WHEN
AHEAD AT DOUBLE YELLOW OR
② 10
FROM HAVANT JUNC:
DOWN LINE →
12
HAVANT JUNC: EAST. TO WARBLINGTON DISTANT.
13
12
17
← UP THRO:
20
15
SAND DRAG
WEST SIGNAL BOX
14
← UP LOCAL
20
15
HAVANT JUNC: EAST UP DISTANT
HAVANT JUNC: EAST. TO ROWLANDS CASTLE DISTANT
60 YDS
50 YDS
440 YDS

HAVANT WEST

DOWN RUNNING SIGNALS

9. DOWN INNER HOME.
10. DOWN STARTING
11. DOWN ADVANCED STARTING

UP RUNNING SIGNALS.

14. UP LOCAL STARTING
16. UP LOCAL HOME
17. UP THRO: STARTING
18. UP THRO: HOME

GROUND SIGNALS

4. FROM DOWN LINE
20. FROM UP THRO: OR UP LOCAL

STOCKHEATH CROSSING

NUMBERS SHOWN THUS: ③

NO APPROACH LIGHT WHEN TOP ARM "ON"
ONE YELLOW ASPECT MEANS BE PREPARED TO FIND
NEXT SIGNAL AT "DANGER."
TWO YELLOW ASPECTS MEAN BE PREPARED TO FIND
NEXT SIGNAL AT "CAUTION"
GREEN ASPECT MEANS "ALL RIGHT" PROCEED.

APPROACH LIGHT
GREEN

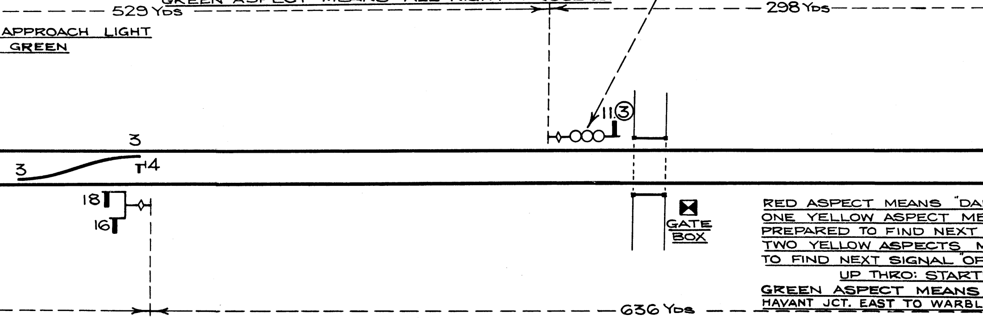
529 Yds
298 Yds
11 ③
3
3
14
18
16
GATE BOX
636 Yds

RED ASPECT MEANS "DA
ONE YELLOW ASPECT ME
PREPARED TO FIND NEXT
TWO YELLOW ASPECTS, M
TO FIND NEXT SIGNAL "OF
UP THRO: START
GREEN ASPECT MEANS
HAVANT JCT. EAST TO WARBL

STOCKHEATH CROSSING

DOWN RUNNING SIGNALS.

2. DOWN DISTANT
3. DOWN HOME

UP RUNNING SIGNAL

6. UP HOME

BEDHAMPTON CROSSING

PREFIX. LW.

CLOSING SWITCH

BEDHAMPTON MILL

NUMBERS SHOWN THUS: [7]

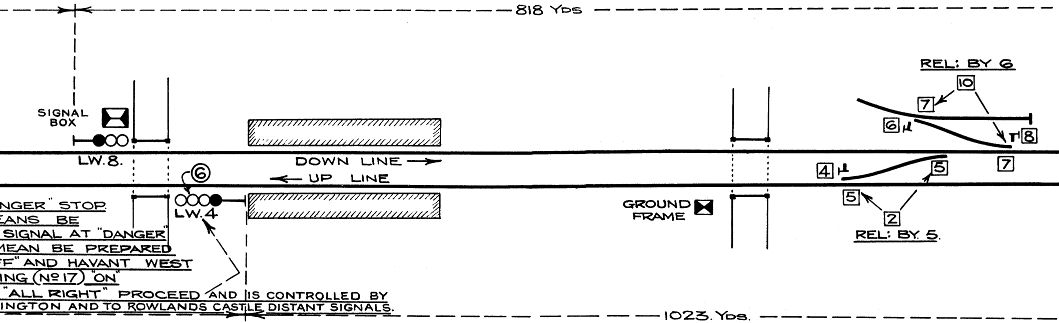
818 YDS
SIGNAL BOX
LW.8.
DOWN LINE
UP LINE
⑥
LW.4
GROUND FRAME
REL: BY 6
10
7
6
T 8
4
5
7
5
2
REL: BY 5.
1023. YDS.

NGER" STOP
EANS BE
SIGNAL AT "DANGER"
IEAN BE PREPARED
F" AND HAVANT WEST
ING (Nº 17) "ON"
"ALL RIGHT" PROCEED AND IS CONTROLLED BY
INGTON AND TO ROWLANDS CASTLE DISTANT SIGNALS.

BEDHAMPTON CROSSING

DOWN RUNNING SIGNALS

7. BEDHAMPTON MILL INTERMEDIATE Nº 1. DOWN HOME
8. DOWN HOME
9. BEDHAMPTON MILL INTERMEDIATE Nº 2. DOWN HOME
10. BEDHAMPTON MILL INTERMEDIATE Nº 3. DOWN HOME

UP RUNNING SIGNALS

3. UP HOME
4. UP STARTING

BEDHAMPTON MILL

GROUND SIGNALS

4. FROM UP LINE
6. FROM DOWN SIDING
8. FROM DOWN LINE.

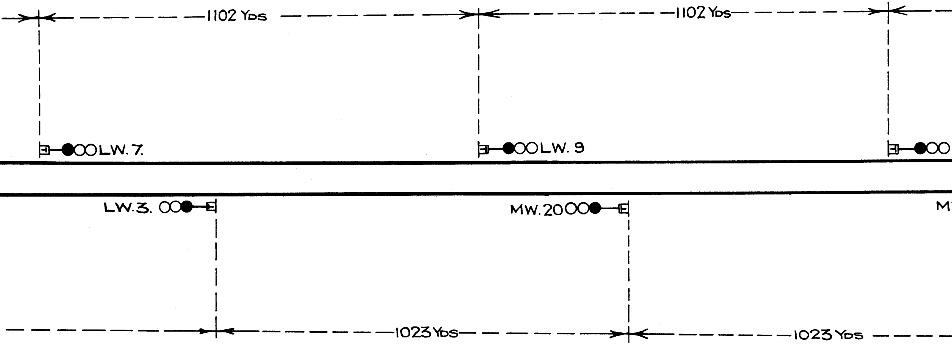
1102 YDS
1102 YDS
LW. 7.
LW. 9
LW.3.
MW.20
M
1023 YDS
1023 YDS

3 ASPECT RUNNING SIGNALS.

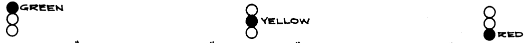
GREEN
YELLOW
RED

"ALL RIGHT"
PROCEED

"CAUTION"
BE PREPARED TO FIND
NEXT SIGNAL AT "DANGER"

"DANGER"
STOP

TELEPHONES ARE INDICATED THUS: $\boxed{T}$

FARLINGTON JUNCTION

PREFIX. MW.

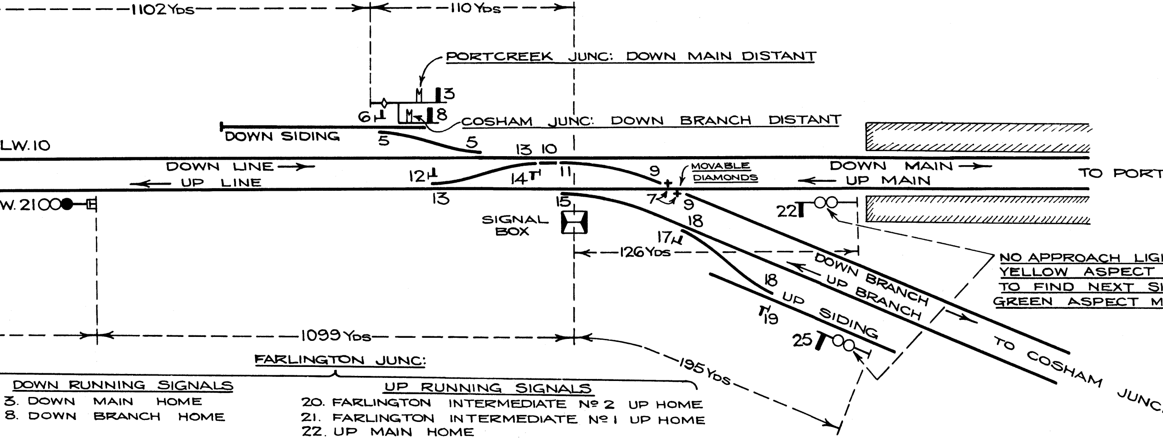
1102 YDS
110 YDS
PORTCREEK JUNC: DOWN MAIN DISTANT
M
3
6
M
8
COSHAM JUNC: DOWN BRANCH DISTANT
DOWN SIDING
5
5
LW.10
13 10
DOWN LINE
UP LINE
12
14
11
9
MOVABLE DIAMONDS
DOWN MAIN
UP MAIN
TO PORT
W.2100
13
15
7
9
18
22
SIGNAL BOX
17
126 YDS
NO APPROACH LIGI
YELLOW ASPECT
TO FIND NEXT SI
GREEN ASPECT M
DOWN BRANCH
UP BRANCH
18
UP SIDING
19
25
TO COSHAM JUNC.
1099 YDS
195 YDS

FARLINGTON JUNC:

DOWN RUNNING SIGNALS

3. DOWN MAIN HOME
8. DOWN BRANCH HOME

UP RUNNING SIGNALS

20. FARLINGTON INTERMEDIATE Nº 2 UP HOME
21. FARLINGTON INTERMEDIATE Nº 1 UP HOME
22. UP MAIN HOME
25. UP BRANCH HOME

GROUND SIGNALS

6. FROM DOWN SIDING
12 FROM UP LINE
14. FROM DOWN LINE
17. FROM UP BRANCH
19. FROM UP SIDING.

CREEK JUNC:

HT WHEN TOP ARM "ON"
MEANS BE PREPARED
GNAL AT "DANGER"
EANS "ALL RIGHT" PROCEED.

:

27-6-37