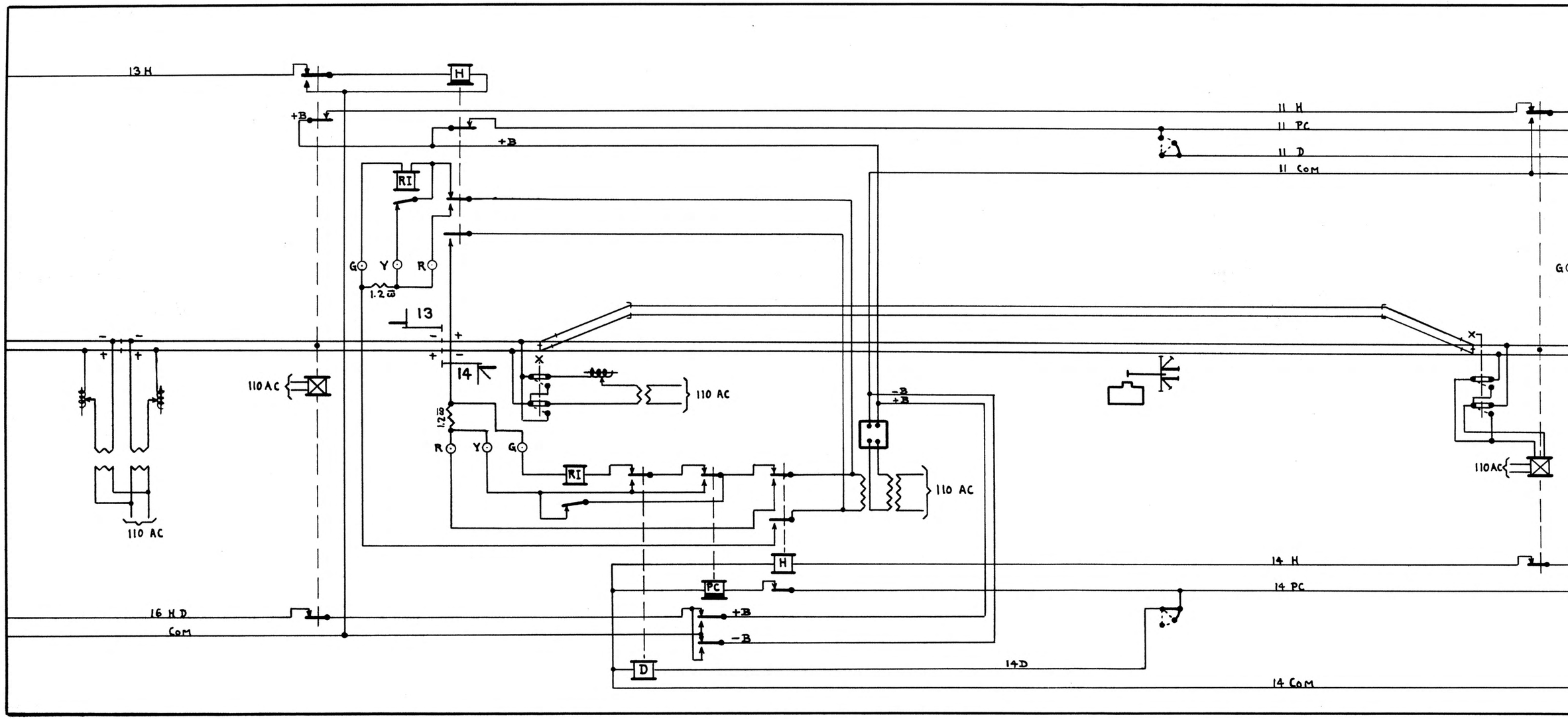
13 H
+B
H
+B
RI
G
Y
R
1.2 Ω
13
14
110 AC
110 AC
1.2 Ω
R
Y
G
RI
110 AC
-B
+B
110 AC
H
PC
+B
-B
D
14D
14 H
14 PC
14 COM
16 H D
COM
11 H
11 PC
11 D
11 COM
110AC

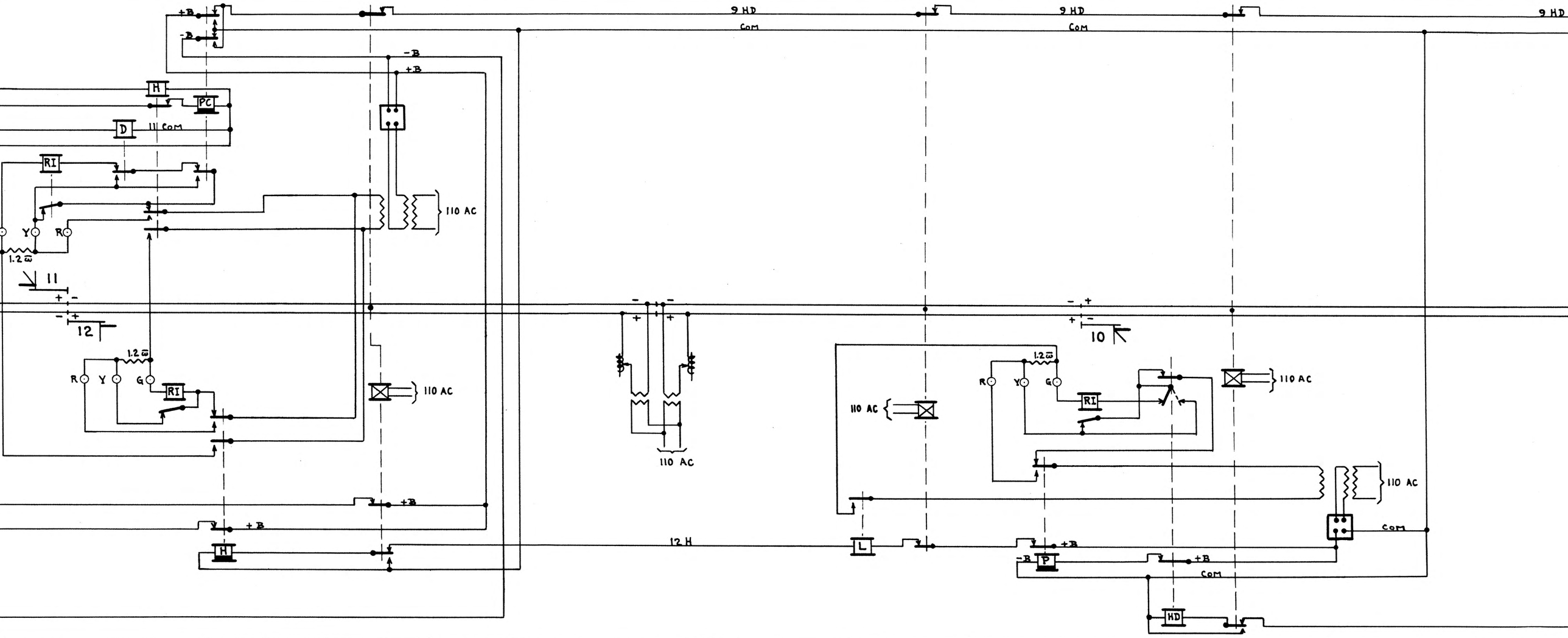
+B
-B
9 HD
Com
H
PC
D
11 Com
RI
Y
R
1.2 ω
11
12
G
110 AC
12 H
L
P
HD
10
Com

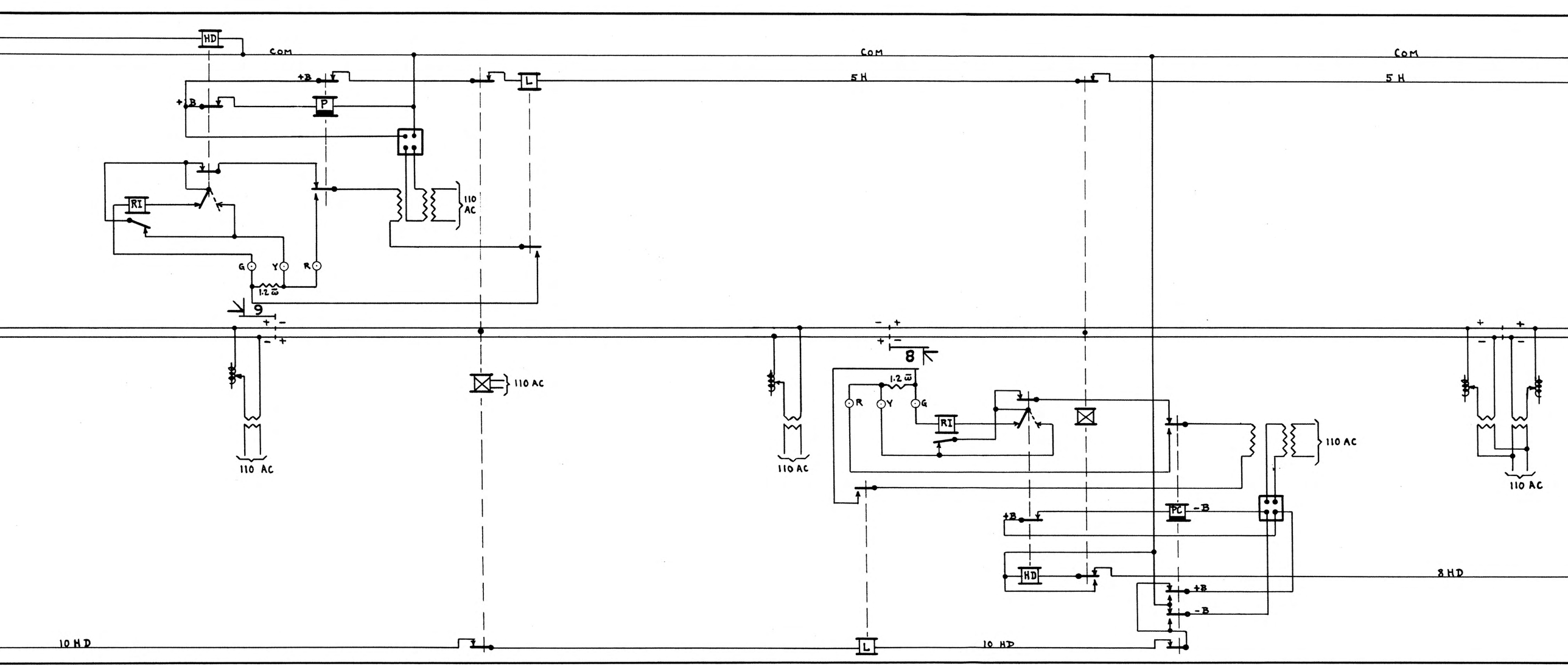
HD
COM
+B
P
L
5H
RI
110 AC
G
Y
R
1.2 ω
9
8
PC
-B
HD
8 HD
10 HD

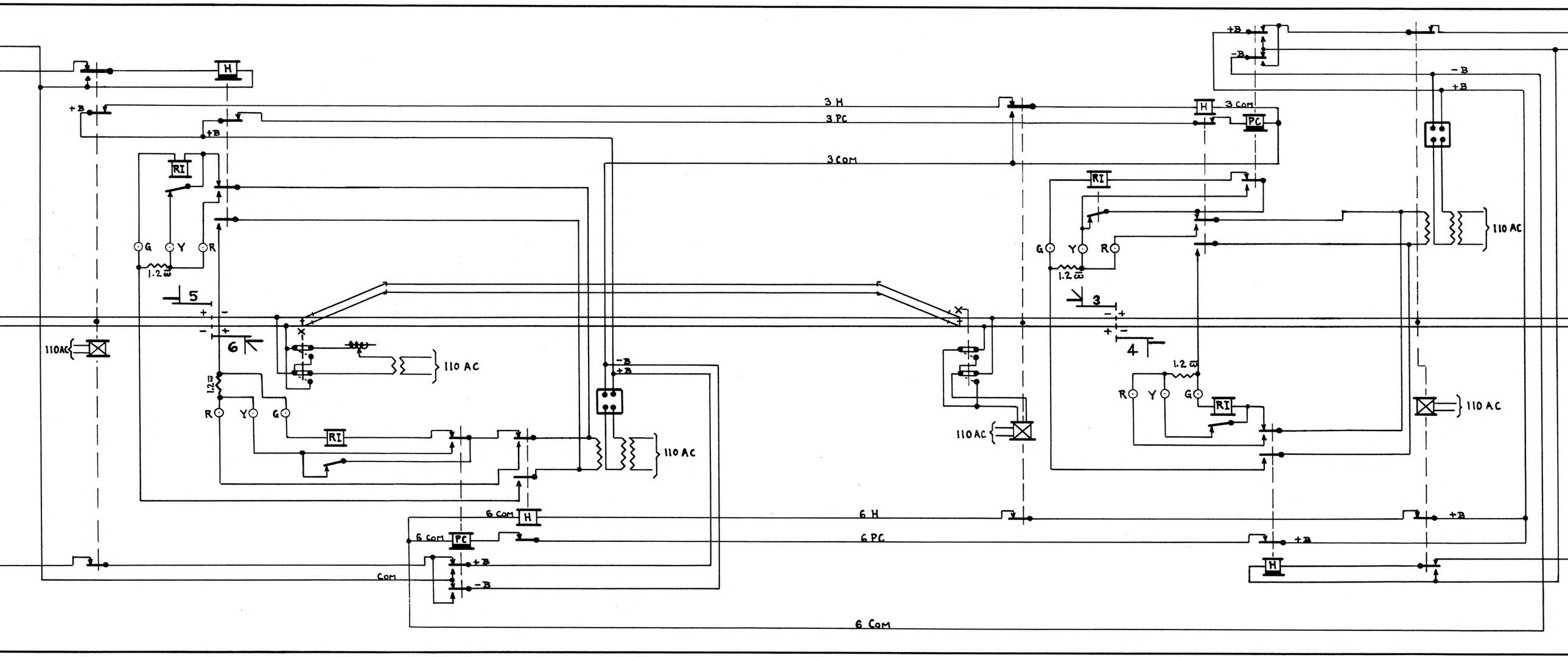
3 H
3 PC
3 COM
6 H
6 PC
6 COM
COM
110 AC
110AC
+B
-B
H
PC
RI
G
Y
R
1.2 ω
5
6
3
4

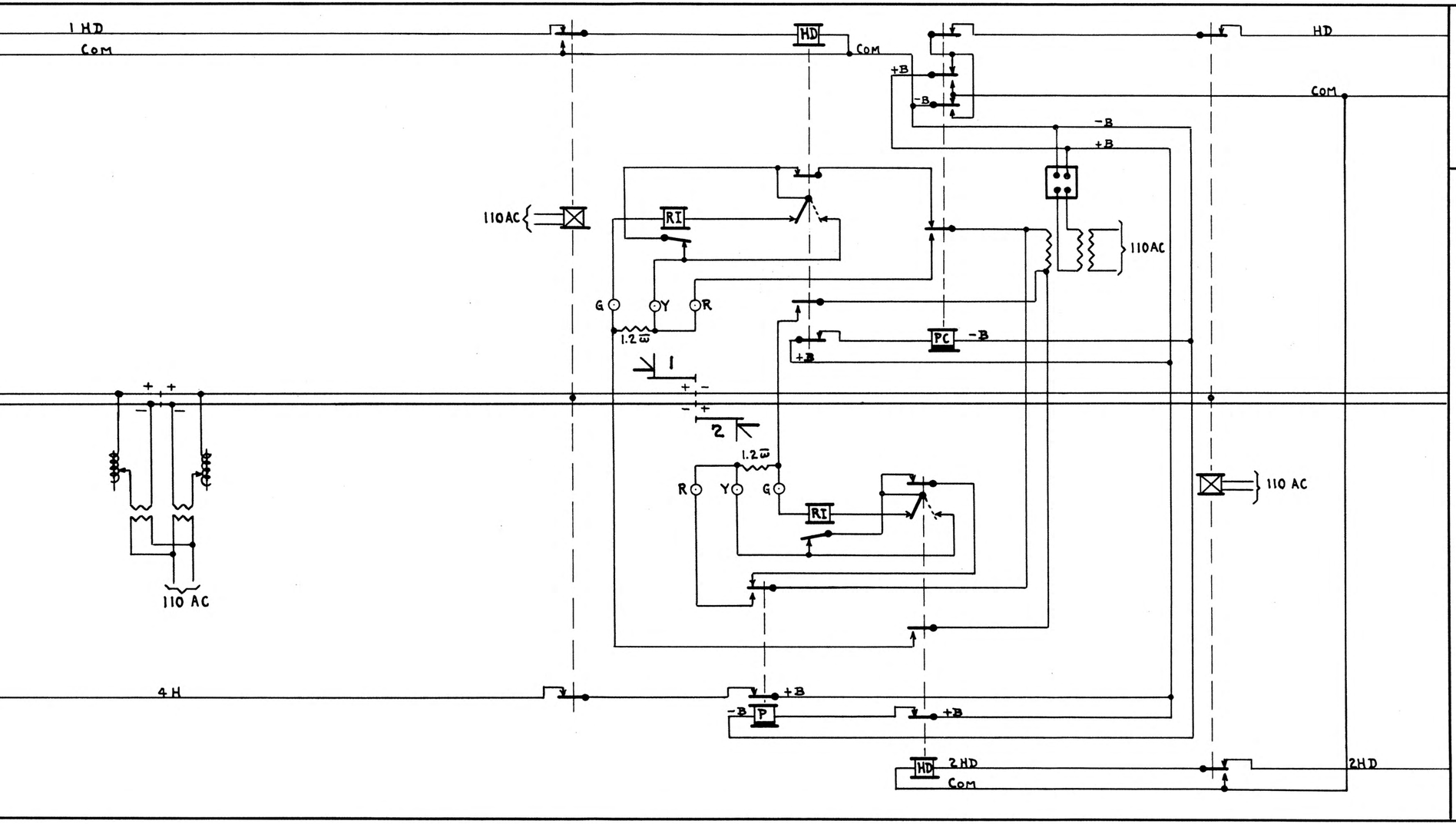

SERIES 1937A

BB-10

N.P.RY.

TYPICAL CIRCUITS

SINGLE TRACK - OVERLAP CONTROL
A C TRACK CIRCUITS

OFFICE OF SIGNAL ENGR. ST. PAUL, MINN.

6-24-37.
8-18-37.
4-11-38.
5-4-39

CHECKED: LSL

APPROVED: _____
SIGNAL ENGR