DEPARTMENT OF THE ENVIRONMENT

# RAILWAY ACCIDENT

# Report on the Derailment that occurred on 19th December 1973 near West Ealing

## IN THE WESTERN REGION BRITISH RAILWAYS

LONDON: HER MAJESTY'S STATIONERY OFFICE
1974

65p net

DEPARTMENT OF THE ENVIRONMENT

# RAILWAY ACCIDENT

## Report on the Derailment that occurred on 19th December 1973 near West Ealing

IN THE
WESTERN REGION
BRITISH RAILWAYS

LONDON: HER MAJESTY'S STATIONERY OFFICE
1974

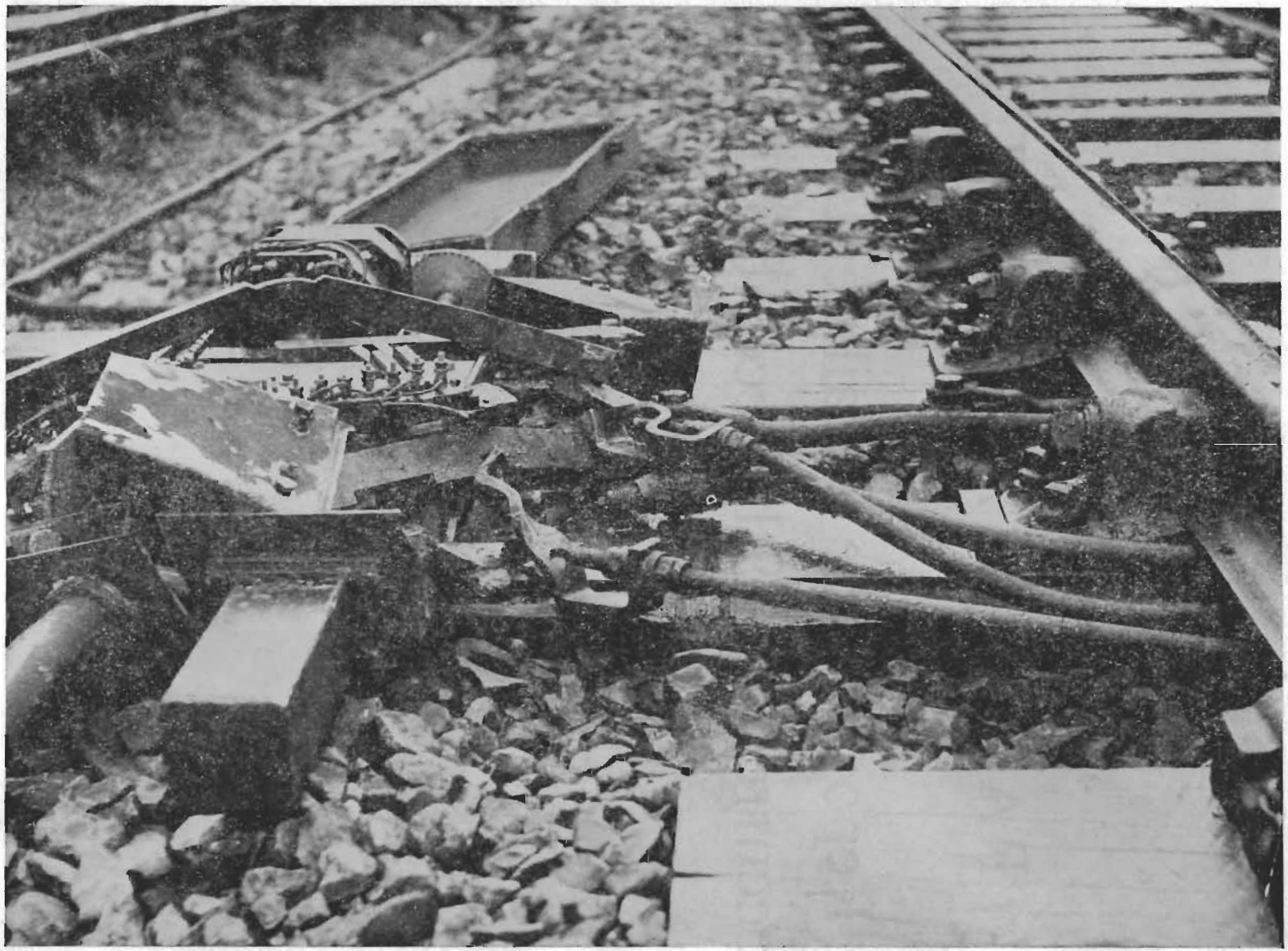

DAMAGED POINT MACHINE AT LONGFIELD AVENUE JUNCTION
LOOKING IN DIRECTION THE TRAIN WAS TRAVELLING

RAILWAY INSPECTORATE
DEPARTMENT OF THE ENVIRONMENT
2 MARSHAM STREET
LONDON S.W.1.
*13th September* 1974

Sir,

I have the honour to report for the information of the Secretary of State, in accordance with the Order dated 20th December, 1973, the result of my Inquiry into the derailment of an express passenger train that occurred at 17.37 on Wednesday 19th December 1973, near West Ealing, about 6 miles from Paddington, in the Western Region of British Railways.

The train involved was the 17.18 Paddington to Oxford Class 1 passenger train (1A82) comprising 11 coaches hauled by a diesel-hydraulic locomotive of Class 52. It left Paddington 11 minutes late at 17.29 and, at some point after leaving the terminal, an insecurely fastened battery box door on the near side of the locomotive fell open. After fouling a number of lineside structures, the door dropped into such a position that it struck the operating rods of the facing points leading from the Down Main line to the Down Relief line at Longfield Avenue Junction, which is situated between Ealing Broadway and West Ealing Stations. The effect was to open the points underneath the locomotive, causing the train, which was travelling at approximately 70 mile/h, to become completely derailed. It came to rest within 210 yards with the locomotive on its right side with the first coach still coupled to it, derailed all wheels, but upright. The next 5 coaches were zigzagged across all 4 lines and severely damaged. The rear 5 coaches were also derailed but remained upright and sustained only minor damage.

The train was carrying approximately 650 passengers of whom, I regret to report, 10 lost their lives. Altogether 94 passengers were injured of whom 53 were taken to hospital, 8 being detained and the remainder discharged after treatment. Eleven passengers were given first aid at Ealing Town Hall.

At the request of Her Majesty's Coroner for Greater London, Western District, an Inspecting Officer of Railways was appointed to act as Assessor at the Inquest on the 10 passengers who were killed. His report is attached at Appendix 1.

The emergency services were alerted at 17.39 by the panel supervisor in Old Oak Common Signal Box when he saw the track circuit indications for all lines in the Longfield Avenue area showing occupied with signals at Red and point lights flashing, and deduced that a derailment had occurred. The Police arrived at 17.44, the first ambulance at 17.46 and the Fire Brigade at 17.48. A team of doctors and nurses from two local hospitals arrived by 18.25. Fourteen ambulances were used to convey the injured to hospital.

The obstruction of all 4 tracks of the Western Region main line caused extensive disruption to train services. During the blockage most main line services were terminated at or started from Reading and a shuttle service was run between Paddington and Reading via the Greenford Loop line until the Up and Down Relief lines were reopened to traffic at 18.45 on 20th December. Breakdown cranes from Old Oak Common and Cricklewood continued the task of clearing the derailed coaches and locomotive but, with the Christmas holiday intervening, the Up and Down Main lines were not reopened to traffic until the evening of 28th December, when, following the restoration of the permanent way, a temporary speed restriction of 20 mile/h was imposed, this restriction being raised progressively until line speed was restored on 2nd January.

The accident occurred on a dark night with good visibility.

## DESCRIPTION

*The Site and Signalling*

1. The Western Region main line from Paddington to Bristol and South Wales is 4-tracked as far as Didcot (MP53½), with Up and Down Relief lines to the north of the Up and Down Main lines. Between Old Oak Common (MP3), where the double track line to Banbury via High Wycombe diverges to the north, and the point of derailment at Longfield Avenue Junction, there are two stations with platforms flanking the Main Lines, at Acton (MP4¼) and Ealing Broadway (MP5½). Between Ealing Broadway and West Ealing, the next station to the west, the line is straight and lies in a shallow cutting on a rising gradient of 1 in 1200.

2. Immediately to the west of an overbridge carrying Longfield Avenue across the railway, just beyond MP6, there was a set of points in the Down Main line forming the facing end of a crossover leading across the Up Main line to the Down Relief line. The connection was laid in 1967 in 110 lb FB vertical material with 'D' switches and a 1 in 10¾ common crossing. The plain track on the approach to the junction was laid in 1964 in CWR on prestressed concrete sleepers. It had been mechanically tamped and lined on the night of 16th–17th December 1973 and had been patrolled on the morning of 19th December, the day of the accident. The line speed limit for the Down Main line at this point is 90 mile/h with a permanent speed restriction of 25 mile/h through the connection to the Down Relief line.

3. The signalling in the area is operated from an 'Entrance-Exit' type panel in the signal box at Old Oak Common (OO) controlling a satellite route relay interlocking located in a relay room at West Ealing. Train working is on the Track Circuit Block System with multiple-aspect colour-light signals consisting, in this area, of 3-aspect searchlight signals with an additional yellow light mounted above to provide the double yellow aspect. All the running signals have individual signal post telephones communicating with the signal box and are provided with Western Region type AWS ground equipment. The signal controlling movement on the Down Main line over the facing connection at Longfield Avenue was OO 34, which was provided with a junction indicator for the diverging route to the Down Relief line. The signals protecting the junction on the Up Main and Down Relief lines were OO 27 and OO 134 respectively.

4. The crossover, the facing and trailing ends of which were numbered 807A and 807B on the Old Oak Common panel, was worked by Westinghouse Style 63 point machines in which the facing point lock and point detection mechanism is incorporated as an integral part of the machine, which is housed in a cast iron case approximately 4 ft long by 16 in wide with a sheet steel cover and mounted approximately 30 inches outside the cess rail on two transverse timbers. The main drive rod or throw bar emerged from the middle of the point machine, was cranked downwards to pass below the running rail between the timbers and attached to the main stretcher bar connecting the two switch blades. Because, at this location, the switches were long, the drive was divided, the second drive being carried along by rodding outside the six-foot rail to another stretcher bar 22 ft 0 in from the toe of the switches.

5. The lock blade and detector blades, connected by rodding to the facing point lock stretcher and the tips of the switch blades respectively, emerged from the point machine housing at the end facing approaching traffic. Where they emerged from the housing they were covered by a light sheet steel weather shield. The arrangement is shown, in both plan and elevation, in Drawing No. 1 attached to this Report.

*The Train*

6. The train that was derailed was the 17.18 Class 1 passenger train from Paddington to Oxford (1A82), booked to make its first stop at Reading at 17.53. It was formed of 11 BR standard Mark I bogie coaches and hauled by a diesel-hydraulic locomotive of Class 52. The train was 796 ft 3½ in. long overall and weighed 389½ tons excluding the locomotive. The coaches were fitted with buckeye couplings and Pullman-type gangways throughout, but the leading coach was coupled to the locomotive using the latter's screw coupling. The train was fitted with vacuum brakes with an effective brake force of 77.8 per cent of its tare weight.

7. The train was marshalled as follows, in order behind the locomotive, which was running with its 'B' end leading.

| | | |
|---|---|---|
| Corridor 2nd | W 26135 | 64 seats |
| Corridor 2nd | W 26097 | 64 seats |
| Corridor 1st | W 13353 | 42 seats |
| Corridor Composite | W 15777 | 48 seats |
| Corridor Composite | W 16222 | 48 seats |
| Corridor Composite Brake | W 21147 | 36 seats |
| Corridor 2nd | W 26068 | 64 seats |
| Corridor 2nd | W 25097 | 64 seats |
| Corridor 2nd | W 25164 | 64 seats |
| Corridor 2nd | W 26106 | 64 seats |
| Corridor 2nd | W 26133 | 64 seats |

With a total seating capacity of 622, the train was carrying approximately 650 passengers.

8. The locomotive, No. 1007, 'Western Talisman', was of C–C wheel arrangement, each bogie being driven by a 1350 hp Maybach diesel through a Voith-North British hydraulic torque converter transmission. It weighed 109 tons in working order and had a maximum service speed of 90 mile/h. It was one of a class of 74 locomotives that were built at Swindon and it entered service on 1st August 1962, since which date it had run approximately 950,000 miles. It was allocated to Plymouth (Laira) Depot.

9. For preheating, starting, and the operation of controls and auxiliaries these locomotives carry a 110-volt lead acid battery comprising 16 separate units of 3 cells each connected in series and housed below frame level in 4 boxes on each side of the locomotive between the bogies, each box having a separate door hinged at the bottom so that it can act, not only as a protective cover to the battery box, but also, when in the horizontal position, as a work table onto which the cell units can be pulled forward for attention. In this position, in which it is held by two hinged steel stays, the door extends to approximately 12 inches outside the maximum static loading gauge for locomotives. Each door is approximately 44½ in long and 22½ in deep and is of double skinned welded box construction with wooden slats on its inner surface, weighing about 80 lbs. In the closed position the door is retained by two carriage-type locks on the upper edge, operated by turning a square-ended key through 180°. In addition, as a safety precaution, a pear-shaped piece of steel is mounted midway along the top edge of the door opening so that in its lowest position, to which it should fall by gravity, it will prevent the door falling open even if unlocked. This device, described in this Report as the 'pear-drop' catch, was part of the original equipment of this class of locomotive, having been added as a modification to the battery box doors of the earlier 'Warship' class locomotives after some open door incidents had occurred.

10. As originally designed, the pear-drop catch had no method of fastening it and relied purely upon gravity. After a number of instances of the catches failing to drop into the vertical position, due to limited clearances, they were modified during 1973 by putting a 5/16 in diameter set screw into a tapped hole in the disc, arranged so that it could, when tightened, extend into a clearance hole in the edge of the door, holding it in its lowest position. The pear-drop catch was painted red so that its position would catch the eye. A diagram of the battery box door and its securing arrangement is included in Drawing No. 1 attached to this Report.

## Narrative

*Maintenance History of the Locomotive*

11. The most recent scheduled maintenance of No. 1007 had been a 250-hour 'B' examination which included the 50-hour 'A' examination. It was carried out at Laira from 8th to 12th December 1973, since when, up to the time of the accident, the locomotive had been 31 hours in service. On 12th December it had worked the 05.45 Plymouth to Paddington and the 17.45 Paddington to Westbury, where it required repairs in respect of loss of coolant, transmission oil leaks and a reversing fault. These did not involve any attention to the battery box doors. On 13th December the locomotive was worked back light to Laira where the 'B' engine was changed and other repairs unconnected with the battery boxes were carried out. It was released to traffic on 14th December and worked the 19.00 Plymouth to Bristol where it developed an AWS fault. On the following day it worked the 07.15 Bristol-Exeter and the 10.40 Exeter-Plymouth where it was stopped at Laira for AWS and preheater faults. Whilst there, some battery box doors were opened on the right-hand side to check the specific gravity of the electrolyte. The locomotive next worked the 05.45 Plymouth-Paddington on 17th December but failed at Reading and had to be assisted forward to Paddington. On 18th December it was worked light to Old Oak Common on one engine and on that evening berthed in the heavy maintenance shop for repairs to the 'A' engine. It was released to traffic at 14.00 on 19th December, the day of the derailment. Evidence in respect of the work carried out on the locomotive whilst at Old Oak Common is set out in paragraphs 46 to 58 of this Report.

*Events Prior to the Derailment*

12. On 19th December locomotive No. 1007 was used to work the empty coaching stock from Old Oak Common to Paddington to form the 16.48 departure to Worcester from Platform 4. It was then held in Paddington Yard Carriage Sidings until about 17.15 when it was brought in and coupled on to the stock to form the 17.18 departure to Oxford, standing at Platform 2 which is on the right hand side of a departing train. The train left 11 minutes late, at 17.29, and ran under clear signals on the Down Main line.

13. The first indication at the lineside that some object had been projecting from a passing train was at Old Oak Common, where an illuminated 'Limit of Shunt' sign on the cess side of the Down Main line had been hit from the Paddington side at a point approximately 2 ft 11 in outside the cess rail and 12 inches above rail level. The position of the sign and the damage to it in relation to an open battery box door on the near side of a locomotive of Class 52 is shown at Diagram A of Drawing No. 1 attached to this Report.

14. The next indications were found at Acton where a number of cast iron cable brackets on a retaining wall on the approach side of the Down Main platform and along the platform face had been broken off. Further similar damage was observed at Ealing Broadway where, in addition, there were marks of something having been in contact with the coping of the ramp at the East end of the Down Main platform and of having impacted heavily with the underside of the coping on the ramp at the west end of the platform, lifting and dislodging some of the coping stones. The relationship between this platform ramp and an open battery box door is shown in Diagram B of Drawing No. 1.

15. Between Ealing Broadway Station and Longfield Avenue Junction there are no structures close to the lineside and there were no indications that anything hanging from or being dragged along by a train had scraped the ends of the sleepers or disturbed the ballast. However, the point machine at the facing end of No. 807 points, located on the cess side of the Down Main line, had been almost completely destroyed by an impact which appeared to have been concentrated at the point where the lock and detector blades emerged from the housing of the machine at a point 2 feet outside the cess rail and 6 inches below rail level. The position of the point machine in relation to an open battery box door on a Class 52 locomotive in the position to which it would fall if not supported by the hinged stays is shown in Diagram C of Drawing No. 1.

16. The damage to the point machine, a photograph of which is reproduced as a frontispiece to this Report, was extreme. The detector rods were bent and the detector slides torn out of the point machine and the rod connecting the facing point lock stretcher to the lock slide was buckled to the extent that the switch blades had been dragged across from the normal almost into the reverse position. The force transmitted back through the main drive rod had broken the throwbar where it was connected to the drive mechanism of the machine. The cast iron case of the machine was broken in several places and its lid had been thrown clear.

*The Course of the Derailment and the Damage Caused*

17. The locomotive travelled 210 yards past the facing points, ending up on its right side between the Up and Down Main lines and obstructing both of them. It was extensively damaged along its right-hand side and at its rear end, where it had been buffer-locked with the leading coach. There was no damage to the left hand side except that the rearmost battery box door was missing with every indication that it had been wrenched off its hinges. The actual door was found, badly battered, lying at the side of the line about 50 ft on the country side of the facing points. Only one of the carriage-type locks was still attached and its tongue was in the open position. The other lock was subsequently found on the Down Main platform at Ealing Broadway. The pear-drop catch was found in the upward or open position and held by the set screw which had been tightened against the panelling.

18. The leading coach of the train remained upright and in line, though derailed all wheels and buffer locked with the locomotive. It sustained body damage to its offside at its trailing end where the second coach had swung round to the right, finishing up on its right side almost at right angles to the track across all 4 lines. The next 4 coaches remained upright but had zigzagged into a tight mass with the trailing ends of the third and fifth vehicles and the leading ends of the fourth and sixth locked together and impacted into the cutting side on the Down side of the line. There was no telescoping, but despite the proven strength of the BR Mk I coach body structure there was a considerable amount of serious body damage in this area and it was here that most of the casualties occurred, when a Commonwealth type cast-steel bogie from the trailing end of the third coach was forced through the body side into compartments at the leading end of the fourth coach. The rear five coaches remained upright, coupled together and more or less in line. They sustained only minor or superficial damage. The position in which the train came to rest is shown in Drawing No. 2 attached to this Report.

19. The damage to the permanent way was extensive. In addition to the damage sustained by the various components of No. 807 points, 580 ft of CWR track in the Down Main line and 320 ft in the Up Main line were destroyed and a 60-ft length of jointed track in the Up Relief line was distorted and slightly damaged.

20. In addition to the destruction of the point machine at the facing end of No. 807 points, the derailment cut the main signalling and telecommunications cables running in a cable route along the Down side of the line.

## Evidence

*In Respect of the Derailment*

21. The train was driven by *Driver T. D. Owen* stationed at Old Oak Common. He had been driving for 14 years and had worked regularly on locomotives of Class 52 since they first entered service. He took over No. 1007 at Old Oak Common on completion of repairs and described to me the extent of his responsibilities with regard to the preparation of a locomotive for service, as laid down in the Driver's Manual. The instruction sets out a long list of items to be examined or checked, the majority of which are in the driving cab or inside the engine compartment. There are only 3 specific items on the outside of the locomotive that a driver is required to check, these are that all air, vacuum and heater hoses are properly secured and cocks closed as necessary, that no depot pipes or cables are attached, and that the main lighting switch is in the 'LOCO' or 'BATTERY' position. There is no reference to the securing of the battery box doors as an item to be checked by the driver.

22. Driver Owen explained to me that in the course of his preparation of a locomotive he would walk round glancing alongside it and checking that the brakes, the brake blocks and the wheels were in proper order. He said that he could not remember ever having seen the pear-drop catches on the battery box doors in other than the correct position, nor could he remember any instance of a battery box door coming open or dropping down when a locomotive of this class was in service. During his preparation of No. 1007 he noticed nothing whatsoever wrong with the locomotive and when he worked the empty coaching stock from Old Oak Common Sidings to form the 16.48 from Paddington he found the locomotive to be in good order.

23. Driver Owen then described the events leading up to the derailment. He told me that he had received green signal aspects from leaving Paddington and that the locomotive was performing properly. He noticed nothing unusual until he felt a lurch as they were passing under the bridge at the western end of Ealing Broadway Station. At the time he assumed that it was a bad rail joint and decided to report it when he stopped at Reading. The next signal, which was the junction signal for Longfield Avenue, was also at green and he received a correct indication from the AWS ramp but there was a sudden thumping from the rear end of the locomotive which then seemed to bounce up in the air and tip slowly over onto its right side and slide along the track until it came to rest. Driver Owen thought that the speed at the moment of derailment was about 70 mile/h and he told me that he had not made a brake application during the course of the derailment.

24. As soon as all movement had stopped and they had collected themselves he told his secondman to pull the emergency fire plunger and then he hoisted him through the cab window on the driver's side and told him to get to the nearest telephone and tell the signalman to stop all traffic. Driver Owen then looked out himself and, seeing that all lines were obstructed, reached down and got hold of a box of detonators which he threw out and then climbed out himself. He made first for a telephone at the side of the line, but it was

not working and when he did find one that was in order he was told by the signalman that the lines were already protected and that the emergency services had been alerted.

25. In reply to questioning, Driver Owen admitted that, in the urgency of the moment, he had not thought about using the locomotive's track circuit operating clips. He thought, in retrospect, that he might have wasted time in trying to locate them, since everything in the cab had been thrown about during the derailment and he was much more concerned at the time in trying to get out and communicate with the signalman.

26. *Secondman R. P. Woolnough*, who had 18 months' experience on the Western Region, confirmed his driver's evidence. He now thought that the lurch they experienced at Ealing Broadway, which he did not think was anything unusual at the time, could well have been caused by the battery box door striking the platform ramp. He told me that, as soon as he got down from the locomotive, he ran straight to Signal OO 27 on the Up Main line, which he knew was close at hand, to tell the signalman what had occurred. He had thought about looking for the track circuit operating clips but had decided that, since he knew that there was a telephone close at hand, his best course of action was to communicate as quickly as possible with the signalman.

27. In charge of the train was *Conductor Guard J. Wells*, stationed at Paddington. He had taken over the empty stock to form the 17.18 departure from Paddington in Old Oak Common Carriage Sidings where he made a full examination of his train, finding everything in proper order. At Paddington he had watched the shunter couple the locomotive to the train and he had then carried out a brake test from the brake compartment at the trailing end of the sixth coach before the train departed, 11 minutes late, at 17.29.

28. When the derailment occurred, Guard Wells was at the leading end of the sixth coach, on his way to the front end of the train. When the coach came to rest it was leaning slightly to the right and the lights had gone out. He made his way back to the brake compartment where he collected his handlamp and track circuit operating clips and, after some difficulty, succeeded in opening the double luggage doors on the cess side. He tried first to place a track circuit operating clip on the Up Main line but was unable to do so since the rails had been splayed apart by the derailment. He then ran back up the line to Signal OO 134 and spoke to the signalman who assured him that the lines were protected and that the emergency services had been called for.

29. *Mr. R. V. C. Pearson*, an assistant in the Passenger Manager's Office, Paddington, was travelling in the third coach of the train, seated in a facing corner seat on the near side towards the rear of the coach. As the train was passing through Ealing Broadway Station he heard a noise which seemed to come from underneath the coach in which he was travelling. He described the noise, which was very loud, as a metallic thud, its nearest equivalent being the sound of a detonator on the track. There then followed a period of perhaps 12 to 15 seconds during which everything seemed perfectly normal and then the coach began to shudder, oscillating from side to side, a movement which he described as becoming more aggressive as the coach turned through 90° and finished up leaning over on its left side.

30. After a few minutes Mr. Pearson managed to get out through the sliding ventilator above the main side light in the compartment and, realising the seriousness of the accident, set out to look for a telephone from which he could get in contact with the Reading control office. He made his way through a private garden on the south side of the line and found an office building in Uxbridge Road where he was able to commandeer a telephone and set up a site headquarters. He telephoned his own office at Paddington, let a colleague know what had happened and asked him to inform the control office of the number of the telephone he was using. Within a few minutes the control office came on the line and he was able to give an eye witness report to Mr. C. R. Postle, the Divisional Movements Manager. He then continued to act as a link between the control office and the site for about an hour and a half.

31. Riding in the front compartment of the first coach was *Mr. D. J. Roe*, employed in the Chief Operating Manager's office at Waterloo. He told me that it was his custom to record details of train performance and that he had in fact recorded details of the timings and calculated the speed of the train up to the moment of derailment. He had worked out the speed as 65 mile/h at Ealing Broadway and told me that the train was still accelerating when the derailment occurred. Mr. Roe had heard two distinct bangs immediately after passing through Ealing Broadway Station followed by a further bang when the derailment started and the coach veered to the right.

32. *Mr. R. Pope*, a signal engineer employed at the British Railways Board but formerly with the Western Region, was travelling in the second compartment from the rear end of the third coach in the near-side corner seat with his back to the engine. He also heard some noises whilst passing through Ealing Broadway which he described as stronger than ballast being thrown up against the train but not such that he felt there was any real emergency. Very soon afterwards, however, the coach veered to the right and, as it jack-knifed, a colleague seated in the diagonally opposite corner was thrown across the compartment against the window breaking it and falling out. This must have happened at the exact moment the coach came to rest because Mr. Pope said he found himself with his head out of the broken window confirming to his colleague, now outside, that they were both all right. He then climbed out through the broken window and, realising they were within the control area of Old Oak Common signal box, an area with which he was familiar, ran at once to the nearest signal on the Up Main line, where the secondman was already speaking to the signalman.

33. Mr. Pope told me that he took the signal post telephone handset from the secondman and identified himself to the signalman, who in fact was known to him personally, and told him that the locomotive was on its side and that the train was spread all over the track, though he did not say that all four lines were blocked because he was not aware at that time that the Up Relief line was also obstructed. However, while he was speaking on the telephone, a *Mr. Cattermole* came up to him and told him that all lines were obstructed. He also discussed with him that the adjacent signal on the Up Relief line, OO 127, was still showing a green aspect. Mr. Pope said he then set about helping to free some of the trapped passengers until he himself was sent off to hospital to have a cut on his forehead attended to.

34. *Mr. W. Cattermole*, also employed at the British Railways Board, was travelling in the rear compartment of the fifth coach. He also heard what he described as a loud mechanical bang in the vicinity of Ealing Broadway Station and perhaps 10 seconds later he became aware that the coach was derailed. The compartment was crushed and some of the passengers were trapped but he managed to extricate himself from the debris and climb out through a gap where the body side had been torn away from the underframe. He at once realised that all four lines were blocked since the other end of the coach in which he was travelling was itself foul of the Up Relief line. He ran round the end of it and made his way in the direction of West Ealing and, just past an overbridge, found Mr. Pope, with his face covered in blood, speaking on a signal post telephone. He noticed that Signal OO 127 was showing a green aspect and, after discussing it with Mr. Pope used the signal post telephone to inform the signalman. He then went back to collect his belongings from the train and to see whether he could be of any assistance to the firemen trying to rescue the trapped passengers from the compartment in which he had been travelling.

35. *Signalman C. F. Duffin* was on duty in Old Oak Common Signal Box in charge of the West Ealing section of the panel. He had taken up duty at 15.00 and his shift had been uneventful. All the signals on the Down Main line were working automatically and he had no occasion on that day to use the connection from the Down Main line to the Down Relief line at Longfield Avenue. At about 17.35 he saw track circuits in the Up Main and Down Relief lines at Longfield Avenue show occupied although there were no trains apart from the 17.18 in the vicinity. He also noticed the point lights for 807 points flashing. He first suspected a power failure in the area and advised the panel supervisor but very soon afterwards the secondman spoke to him on the telephone, followed by Mr. Pope, whom he knew from the time when the new signalling in the area was being installed. Signalman Duffin was unable to recall being told by Mr. Cattermole that Signal OO 127 was at green, but he said that the Up Relief line was protected in any case since the signal in rear, OO 125, was at red.

36. *Panel Supervisor O. G. Hawkins* confirmed Signalman Duffin's evidence and said that when he saw the track circuits showing 'occupied' and signals showing 'out' he suspected that a derailment had occurred. He instructed the signalman to put all the protecting signals to danger and he himself telephoned to Ealing Broadway Station to ask whether they could see anything on the Down Main line. While he was speaking to the assistant area manager, the secondman telephoned the signalman and reported the derailment, so Mr. Hawkins asked the assistant area manager to call out the emergency services from Ealing Broadway.

37. The assistant area manager at Ealing Broadway was *Mr. M. Wright*. As soon as he learnt of the derailment from Mr. Hawkins he told a member of his staff to call out the emergency services and set out himself at once to the site by car. On arrival at Longfield Avenue he first met the guard of the train, who confirmed that he had used his track circuit operating clips for protection, and then set out to locate the driver. As soon as he was satisfied that everything possible was being done for the injured and stranded passengers he made a preliminary search from the rear of the train towards Ealing Broadway and found the damaged point machine. His first reaction was that it might have been caused by vandalism and he found a policeman and asked him to remain at the scene and prevent any interference with the machine until the experts arrived to examine it. Mr. Wright then walked back along the Down Main line towards Ealing Broadway but found no other signs of damage until reaching the station where he saw the damage to the platform. He then reported by telephone to the Divisional Movements Manager at Reading.

38. *Chief Technician D. L. Turner* of the Chief Signal and Telecommunications Engineer's Department was, by chance, travelling on the train that was stopped by signals at Ealing Broadway immediately behind the train that was derailed. On learning of the accident he set out on foot towards Longfield Avenue. On arrival at the site he was at once aware that the derailed coaches had ploughed into the cutting side where the main signal cable route was located, including both control cables and 660V power cables. In view of the possible danger from the latter, he made it his first job to get that section of the cable isolated. He also advised the signal box that, on account of the damage to the non-safety circuits in the control and indication cables, the signalman should not rely on his panel indications between the point of derailment and Hanwell.

39. Mr. Turner then went back to examine the point machine at the facing end of No. 807 points. Though it was extensively damaged he was able to satisfy himself that the point machine itself was in the full normal position and bolted. He then examined the damage to the machine and the rodding and noticed that the light weather shield protecting the hole where the rods emerge from the casing was missing and, after a search, he found it some 20 yards down the track and 15 feet up the bankside. It appeared to have been torn off the machine by a violent external blow.

40. A series of tests of the integrity of the signalling in the area of the West Ealing interlocking, which includes the junction at Longfield Avenue, was carried out by *Mr. R. S. Gilbert, Electronics and Testing*

*Assistant*, to the Divisional Signal and Telecommunications Engineer. He tested all the circuits associated with the point machine at Longfield Avenue and found them in proper order. As a further precaution all the control relays were subsequently removed for specialist testing under laboratory conditions. The characteristics of all these relays were entirely satisfactory. Mr. Gilbert was satisfied that there could have been no electrical power applied to the point machine irregularly which could have caused the machine to move in any way and that there was no fault in the signalling which could in any way have contributed to the derailment.

41. *Traction Inspector A. E. Holder*, who was on duty at Paddington, reached the scene of the derailment at about 18.35 and first satisfied himself that the driver and secondman were unhurt. Later he looked at the facing points at Longfield Avenue and observed that the switch blades were nearly in the reverse position with a gap of about 1 inch between the left hand switch blade and stock rail. He then saw the damage to the point machine and noted that its cover was missing. He then walked a little further to where there was a policeman guarding a battered steel object. He did not recognise it for what it was at the time though he turned it over and saw that it was blue and possibly part of a locomotive. He then went further forward and examined the locomotive, which was lying on its off-side, and when he clambered on top of it he found one of the battery box doors missing and realised that this was the object that he had seen near the points. At the time he did not notice in what position the pear-drop safety catch was.

42. *Mr. J. L. James, Chief Inspector in the C. M. & E. E's Department*, heard an announcement of the derailment on the BBC news and made his way to the scene. When he arrived the police and fire services had the rescue operations well in hand and there was nothing he could do to help, so he went to examine the locomotive which was lying on its right-hand side in the direction of travel. He entered the cab through the right hand section of the front window, which had been forced out, and examined the position of the various controls and then walked round the locomotive looking for signs of anything that could have caused the derailment. He then got on top of the locomotive, which was its left-hand side, and found that the fourth battery box door from the leading end had been torn off its hinges and the restraining links were broken. He found the indicator catch, the red painted pear-drop, in what would have been the upwards position so that it would not engage with the door and it was held in that position by the set screw. He was able to slack off the screw with one finger however and then the catch became free to move into any position.

43. Mr. James told me he then met Inspector Holder who showed him the damaged point machine and the battered object which was being guarded by a policeman. He was able to identify it as a battery box door from a locomotive of Class 52 and most probably from this particular locomotive. He examined the damaged door and noted that one of the two carriage-type locks was missing and that the tongue of the one that was still there was in the unlocked position.

44. *Mr. S. R. D. Power, Chief Mechanical and Electrical Engineer, British Railways, Western Region*, told me that, although he was virtually certain from the circumstantial evidence at the scene of the accident that the derailment had been directly caused by the battery box door coming into contact with the point operating rods, he had arranged for a special examination by the British Railways' London Area Laboratory of paint particles found on the point rodding to determine whether or not they could have come from the battery box door. He told me that their findings, which are reproduced as Appendix 2 to this Report, clearly established that the paint particles on the rodding, which when examined microscopically, had nine recognisable layers of paint in the same sequence as samples from the battery box door, must have come from the latter and that he regarded this as conclusive evidence that the battery box door struck the point operating rods.

45. Mr. Power assured me that, as soon as it became apparent what had caused the accident, on the very night it occurred, the Western Region's Headquarters Maintenance Control at Paddington was instructed to alert all Western Region locomotive depots and other regions maintenance controls to pay particular attention to the security of the battery box doors on locomotives of Class 52.

*In respect of Maintenance of the Locomotive*

46. *Mr. B. M. Jordan, Area Maintenance Engineer, Old Oak Common*, outlined for me the organisation and staffing arrangements for the depot, which is continuously manned on a three shift basis. In charge of each shift is a Senior Shift Supervisor and he is assisted by a Reception Foreman, who is in charge of the servicing shed where locomotives are fuelled and minor examinations and repairs carried out, and an Assistant Shift Supervisor who controls the shop floor activity in the heavy maintenance shop where major examinations and heavy repairs are carried out. All locomotives arriving at the depot normally pass through the servicing shed and are then either returned to traffic or sent to the heavy maintenance shop which, at Old Oak Common is, by custom, referred to as "The Factory". The work force in the Factory consists of fitters, electricians and labourers together with such grades as attendants, crane drivers, etc., and includes on each shift a shopman detailed as a battery attendant who normally works on his own, under the direction of the supervisor, putting locomotive batteries on charge and taking them off.

47. Mr. Jordan explained that attention to locomotive batteries was essentially of two kinds. In the course of a major examination, when the level and specific gravity of the electrolyte in every cell has to be checked, it was necessary to open all the battery box doors. At other times, such as when a locomotive was undergoing a casual repair which could cause some drain on the battery, it was usual to put the battery on

charge so that the locomotive would go back into traffic with a fully charged battery. In such cases it would be necessary to open one door in order to check the specific gravity in one or two cells to monitor the level of charge and it would be normal for the door to remain open as long as the battery remained on charge.

48. *Shopman (Grade 2) C. O. Pitter* was battery attendant on the night shift on 18th December. He came on duty at 22.00 and the first task he was given was to put Locomotive No. 1007 on charge. Before connecting the charging leads he opened the battery box door nearest the charging connections at the 'A' end of the locomotive and checked the specific gravity of the electrolyte, which he recorded as 1180. The level of the electrolyte was satisfactory. The battery charger that he used was about opposite the centre of the locomotive and he attached the leads, which lay across the floor, by passing them up underneath the skirt of the locomotive to the terminals in the access hole immediately to the right of the open battery box door. He went back to the locomotive once during his shift to check the electrolyte and when he went off duty at 06.30 the locomotive was still on charge and the one battery box door was still open. He was unable to recall whether there was a step ladder adjacent to the open battery box door.

49. I asked Shopman Pitter to describe to me the procedure he followed when opening and closing battery box doors on locomotives of Class 52. He told me that, when opening the doors, he always first raised the pear-shaped safety catch and secured it in the upwards position by a turn of the set screw so that it did not interfere with the opening of the door. He said that he had on many occasions found one and occasionally both the carriage-type locks already in the open position when he came to open a door but he had never come across one with the pear-drop catch secured in the wrong position. When closing a door he would first lock it and then secure the pear-drop catch in the down position. He found it was usually necessary to do it in this sequence because the door did not always close sufficiently to allow the pear-drop catch to fall until drawn fully in by the carriage-type locks. He said that, even with the pear-drop catch up, the doors would remain in the closed position when unlocked as long as there was no vibration.

50. Working on the 'A' engine of Locomotive No. 1007 on the night shift on 18th December were *Fitters (Shopmen Grade 4) R. C. Buckingham and S. T. Medway*. There was little space within the engine room and when the Quality Control Inspector came round to see how their work was progressing he placed a set of portable steps against the side of the locomotive so that he could look in through the side window of the engine room. Both Buckingham and Medway recalled that these steps were still in position against the side of the locomotive, immediately to the right of the open battery box door, up to the time they went off duty at the end of their shift. Medway particularly recalled that the steps were not directly opposite the window because on one occasion he climbed out of the engine room through the window and he found it difficult because the steps were offset to the right in order to clear the open battery box door.

51. *Acting Assistant Supervisor B. A. Trimm* was in charge of the night shift in the Factory on 18th December in the absence of the regular supervisor on sick leave. He told me that, at the beginning of the shift, he had given the battery attendant a list of locomotives that needed to be put on charge or required other attention to their batteries. He had little occasion to go near Locomotive No. 1007 during the night, but he recalled that, towards the end of his shift, at about 05.30, when making up his progress sheet for the Senior Shift Supervisor, he went up to speak to the fitters through the engine room side window. To do this he stepped on an open battery box door below the window. He did not recall seeing the portable steps alongside.

52. The senior shift supervisor for the morning shift on 19th December was *Mr. L. Wiggins*. He outlined for me the work that was done on Locomotive No. 1007 during his shift. There were two fitters to continue the work on the fuel system of the 'A' engine, the battery was still on charge under the care of the battery attendant, and two men were detailed to clean the locomotive's body sides. Mr. Wiggins told me that the first time he saw No. 1007 that morning was sometime after 07.00 when he had finished allocating duties. He was standing near the 'B' end of the locomotive and recalled seeing the set of portable steps in position at the engine room window near the 'A' end. He remembered that the steps were positioned square to the window because he saw someone standing on the steps and leaning in through the window. The battery box door was closed and he did not himself see it open at any time during the shift, though he did recall seeing the charging leads attached. At about 12.00 the fitters had reached the stage at which they were running the engine on test and on account of the noise and smoke nuisance he instructed his assistant shift supervisor to have the locomotive removed from the Factory to continue the tests outside. In Mr. Wiggins's view it was not unusual to see a locomotive on charge without a battery box door being left open. In this case there was no recorded battery defect and the charge was in the nature of a booster while the maintenance work was going on and he would not have expected to have seen a door open.

53. *Mr. G. Abbas* was the assistant shift supervisor working under Mr. Wiggins. He recalled that at about 08.00 on 19th December he had occasion to speak to one of the fitters working on Locomotive No. 1007 and to do so he climbed the steps which were positioned directly opposite the engine room window and close in to the body side. With the steps in that position it would not be possible for the end battery box door to be open. Later on, when instructed by Mr. Wiggins to have the locomotive moved outside the Factory he told the battery attendant to take it off charge and to "box it up". Mr. Abbas explained that this was a standard expression which he would have used whether or not the battery box doors were open. After a few moments the battery attendant returned and told him that he had taken the charging leads off and that the locomotive was already 'boxed up'. He did not himself walk round the locomotive before it was moved, but he did satisfy himself that work on it had ceased and that the scotches had been removed.

54. The battery attendant on the morning shift was *Electrician (Grade 2) F. Ashley*. He told me that he had a number of locomotives on charge that morning and that he had checked the specific gravity of the electrolyte in some of the batteries but not on Locomotive No. 1007. He did not see a battery box door on this locomotive open at any time. He said that he had no occasion to go near No. 1007 until he was told by Mr. Abbas to 'box-up' the locomotive and remove the charging leads preparatory to moving it outside the Factory. He found the battery box doors already closed and assumed that they had been properly secured. He admitted that he did not make any check on them or look at the position of the pear-drop safety catch on any of the doors. He was not surprised to see a locomotive on charge with all the doors closed as he had seen it many times before. In reply to questioning Ashley told me that he wore black single piece overalls with a jacket on top.

55. The two fitters working on the 'A' engine of Locomotive No. 1007 on the morning shift on 19th December were *Shopmen (Grade 4) G. J. Jean-Baptiste and A. Samy*. Neither could remember seeing a battery box door open on the locomotive at any time during their shift, though both men saw the portable steps adjacent to the engine room window. Fitter Jean-Baptiste was not certain whether the steps were directly opposite the window or offset to one side, but Fitter Samy thought that they were in line with the window. Both men stated that they did not have occasion to move the steps at any time.

56. Helping the two fitters was *Tradesman's Assistant (Shopman Grade 2) A. Foster*. He also remembered seeing the portable steps against the side of the locomotive, but did not recall seeing a battery box door open at any time during his shift. Part of his task was to refill the locomotive's sand boxes and he thought that, if there had been a battery box door open, he would have noticed it. He remembered having to lift up the charging leads to pass his barrow beneath them and later he saw the battery attendant remove the leads. He did not see him close a battery box door.

57. Towards 10.00 on 19th December *Labourers (Shopmen Grade 1) F. A. Barret and P. A. Jules* started to clean the body sides of Locomotive No. 1007 for which they used a wheeled scaffold, starting at the 'B' end of the locomotive. The former was the only witness to claim that he had seen a battery box door open during the morning shift. He said that when they started to clean the side of the locomotive there was one battery box door open, adjacent to the portable steps near the other end of the locomotive and that, so that they could move their scaffold along the side of the locomotive, someone came and pushed the door shut. He said that he did not shut it himself and that the man who did, whom he did not recognise and was wearing blue overalls or a boiler-suit, also removed the charging leads, though Shopman Barret could not remember whether he had done this before or after closing the door. In contrast, Shopman Jules was sure that there was no battery box door open when they started to clean the locomotive and he did not see anyone open or close a battery box door or see any charging leads attached to the locomotive. He did remember the portable steps, however, and thought that they were not very close to the body side.

58. I asked Mr. Abbas what instructions he gave to the two shopmen detailed to clean the locomotive, both of whom had only been a few weeks in railway service. He told me that if they found anything, such as an open door, which interfered with their cleaning work, they should not shut it themselves but report it to a supervisor who would get someone to close it for them. On the day concerned neither of the men approached him to have a door closed.

## Conclusions

59. The immediate cause of this derailment is not in doubt. The rearmost battery box door on the near side of the locomotive, which was unlocked and had its pear-drop safety catch secured in the raised position and so ineffective, fell open as a result of vibration some time after the train left Paddington and before it reached Old Oak Common. The open door, extending some 12 inches outside the normal loading gauge, struck a number of lineside objects including the underside of the platform ramp at the west end of the Down Main platform at Ealing Broadway. This contact forced the door downwards on its hinges and tore away the two hinged stays, thus allowing the door to drop into a position in which its edge was approximately two feet outside the running rail and 6 inches below rail level with the consequence that it struck the operating rods of No. 807 facing points at Longfield Avenue some 650 yards further on. The speed of the train at the time was about 70 mile/h and the force of the impact was such that the switch blades were instantaneously pulled away from the position in which they had been set for the straight ahead route, causing the rear bogie of the locomotive to run into derailment with the wheel flanges at each side passing between the switch blade and the stock rail. The total derailment of the train was thus inevitable and there was no way in which the driver could have mitigated its effects.

60. The design of the carriage-type locks on the battery box door, which required a 180° turn from the fully open to the locked position, was such that they could not have worked open of their own accord and there was no evidence of any kind to suggest that any person had cause to unlock the door between the time Locomotive No. 1007 was released to traffic from Old Oak Common on the afternoon of 19th December and the derailment later the same evening. I can only assume, therefore, that the door which fell open was unlocked with the pear-drop safety catch secured in the raised position when the locomotive left the depot, but that its movement during the working of the empty coaching stock train from Old Oak Common Carriage Sidings to Paddington was not violent enough to cause the door to fall open.

61. The circumstances in which the locomotive came to be released into traffic from Old Oak Common Depot without the door being properly secured are less clear and there is a degree of conflict of evidence in relation to the time at which the battery box door concerned was actually closed. That it was opened in the first instance by Shopman Pitter, the battery attendant on the night shift, I have no doubt and it was he, on his own admission, who secured the pear-drop catch in the raised position in which it was found after the derailment. I think is is most unlikely, however, that either he or Electrician Ashley, the battery attendant on the morning shift, would have closed a battery box door without securing it properly. Both men struck me as reliable, and hence unlikely to neglect to carry out such a regular feature of their job, but also as somewhat lacking in initiative. Electrician Ashley when told to 'box-up' the locomotive did not consider checking the already closed doors to satisfy himself that they were all properly secured. He should not have needed to be specially told to carry out such a check, which should have been automatic at least to the extent of looking to see that all the pear-drop catches were in the proper position, and he must therefore bear some degree of responsibility both for the door being unlocked and for the pear-drop catch being in the raised position.

62. To the other men working on or around the locomotive while it was in the Factory, an open battery box door would have been no more than an unimportant detail, unless it actually obstructed them in some way from carrying out their job, in which case there could have been some incentive to close the door just to get it out of the way and this, in my view, is the most likely explanation of how the door came to be closed, though the conflict of evidence makes it impossible to establish who actually closed it or at what time.

63. These details are, in fact, unimportant. What is important is that there was not an effective system in operation at Old Oak Common Depot to prevent a locomotive being released to traffic without a check being carried out by a responsible person to ensure that all roof hatches, body side doors, battery box doors, safety catches, etc. were secure and properly fastened. When Mr. Abbas instructed the battery attendant to 'box-up' the locomotive, and was told that the battery box doors were already closed, he did not ask whether they were all properly secured nor did he make a check himself before allowing the locomotive to be moved out of the Factory. As the supervisor immediately responsible for the work carried out in the heavy maintenance shop and in the absence of any specific delegation of such a check to a responsible tradesman, Mr. Abbas must also bear some degree of responsibility for the battery box door not being properly secured.

64. It was not part of the driver's duties to check the security of the battery box doors during his preparation of the locomotive which he carried out outside the Factory in the poor light of a December afternoon. A more observant man might possibly have noticed the pear-drop catch in the raised position, drawn attention to it, and so prevented the accident, but the fact that Driver Owen did not see it does not make him in any way responsible for what ensued.

65. That it was possible to secure the pear-drop safety catch in the raised position was a factor which contributed to this accident. I have been informed that the modification described in paragraph 10 of this Report was carried out on the initiative of the local management at Plymouth and did not have the prior approval of the regional management or of the Chief Mechanical and Electrical Engineer of the British Railways Board. Its intention, to enable the catch to be secured in the locked position, was wholly admirable, but the manner in which it was carried out enabled the whole object of having the catch to be circumvented, in that it became possible to secure the catch in the raised position. A more careful study of the problem before the modification was put in hand might have enabled this hazard to have been foreseen and so avoided.

## Remarks and Recommendations

66. The most fundamental way in which a recurrence of this sort of accident can be prevented is to ensure that, whenever a locomotive is released to traffic after maintenance attention, whether a scheduled examination or a casual repair, a specific responsibility is placed on a designated tradesman or supervisor to check that all roof hatches, bodyside doors, battery box doors, safety catches, etc. that may have been disturbed during the repair have been properly refastened. In the case of scheduled examinations, a final check is required, as part of the 'A' examination, to ensure that all roof hatches, safety catches, clips and bodyside doors are secure and that all safety chains are intact and in good condition. In the case of casual repairs, arrangements have now been made for the appropriate repair document, which must be signed by the tradesman responsible and countersigned by a supervisor, to be stamped with a reminder that the person completing a repair is responsible for seeing that any covers, roof hatch, battery box door, safety chain and/or clip which has been disturbed during the repair has been returned to its correct position and is secure.

67. The redesign of the pear-drop safety catch was referred to the Chief Mechanical and Electrical Engineer of the British Railways Board. A new design has been produced in which the safety catch, a substantial piece of 1¼ in by ⅜ in steel bar 6 in long, is prevented by stops from being raised more than just enough to allow the door to be opened or closed and is pivoted sufficiently clear of the body side to allow it to drop into the safe position before the carriage-type locks draw the door fully home. The new design of catch, painted yellow to give the maximum contrast with the blue livery of the locomotive, has now been fitted to all locomotives of Class 52 still remaining in service. This modification was completed by August 1974.

68. Arising from the earlier modification to the pear-drop catch having been carried out locally and without authority, I have been assured by the Chief Mechanical and Electrical Engineer of the British Railways Board that all regions have been reminded that no modifications may be carried out to locomotives without his prior approval.

69. There was no fault of any kind in the signalling and, up to the moment that it was virtually destroyed by impact of the battery box door, the point machine was set and locked for a through movement on the Down Main line. However, apart from factors arising from the design of the point machine itself, the integrity of a facing point lock where it is incorporated in a point machine depends upon two external factors, the positive location of the machine housing with respect to the two stock rails, and the length and rigidity of the rodding connecting the facing point lock stretcher to the lock blade itself. In this accident the blow delivered by the corner of the battery box door distorted, and hence in effect shortened, the rodding and thus opened the facing points. The position of the point machine, over 2 feet outside the running rail and well below rail level, was far outside the normal loading gauge and it has never been thought necessary to protect equipment in this position from accidental damage in the way that facing point locks located in the four-foot are protected by ramped steel plates against damage by couplings or other running gear hanging down beneath a train, nor do I consider that the provision of any such protection can be justified in the light of the fortuitous circumstances of this single accident.

I have the honour to be,
Sir,
Your obedient servant,

I. K. A. McNaughton

Lieutenant Colonel.

The Permanent Secretary,
Department of the Environment.

Appendix 1

Railway Inspectorate
Department of the Environment
2 Marsham Street
London S.W.1
*25th February* 1974

Sir,

I have the honour to report for the information of the Secretary of State that, in accordance with the Order dated 12th February 1974 I acted as Assessor to Her Majesty's Coroner for Greater London, Western District, at the Inquest into the death of ten passengers in a railway accident at West Ealing in the Western Region of British Railways, on 19th December 1973.

The Inquest was held at Hammersmith on 21st February 1974 when the jury returned a verdict of accidental death, a finding with which I am in full agreement.

I have the honour to be,
Sir,
Your obedient Servant,

A. G. B. King,

Major.

The Permanent Secretary,
Department of the Environment.

EXTRACT FROM REPORT DATED 7TH JANUARY 1974 BY MR. A. L. ASTLES, AREA SCIENTIST RESEARCH AND DEVELOPMENT DIVISION, TO C. M. & E. E. WESTERN REGION.

*Derailment at Ealing—19th December* 1973

In response to a request from your department on December 20th 1973, members of the London Area Laboratory visited the site of the derailment on the same day.

C. M. & E. E's staff explained that it was considered that the accident was caused by an open battery box cover coming into contact with various lineside installations, being forced into a position vertically downwards and so striking the point operating mechanism.

It was suggested that a "Shunt Limit" signal at Old Oak Common, Ealing Broadway Station platform base and the point operating mechanism be examined for evidence of paint transferred from the battery box cover.

The casing of the Shunt Limit signal was torn and bore blue smears and a sample of this was taken. Ealing Broadway platform base showed evidence of scoring and blue paint smears, which were also noted on cable wrapping and conduit which had been torn from their fixings. Samples of these smears also were taken.

On the point machine, samples were taken from the rods where impact had occurred even if no paint was visible, and controls were taken from the damaged battery box cover for comparison.

Where possible the samples were examined by X-ray fluorescence and optical microscopy. The results indicated that the smear on the Shunt Limit signal and those on items at Ealing Broadway could have been part of the paint system of the damaged battery box but there is no definite proof of this.

When the samples from the point rod mechanism were examined it was possible to separate paint flakes from the surrounding dirt and grease. They were few in number and very small, typically less than 2 mm. sq.

When examined by X-ray fluorescence the flakes obtained from the first and second point rods were shown to have a similar chemical composition to that of the paint sample removed from the battery box cover.

Among these paint flakes from the first and second point rods were some having similar appearance to the control which when examined microscopically in cross section were found to have nine recognisable layers, in the colour sequence blue/off white/black/ red/green-brown/black/red/blue-black/orange.

The control sample, examined in the same manner had eight recognisable layers in the sequence blue/ off white/black/red/black/red/blue-black/orange i.e. the same as those on the point rod with one internal layer apparently missing. The two samples were, therefore, very similar but could not be considered identical, so further samples were taken from the battery box cover on December 28th.

When examined one of these further samples was shown to have the same number of layers in the same colour sequence as the two from the point rods and this can be taken as proof that all three samples came from the same source.

Paint samples from the battery box covers of three other locomotives showed that the number of layers of paint can vary considerably, and also that there may be different numbers of layers on different parts of the battery box cover, e.g.

| | |
|---|---|
| 1049 | —13 layers found |
| 1057 | — 2 and 3 layers found |
| 1053 | —10 layers |

*Conclusions*

1. There is some evidence that paint on the Shunt Limit sign and the platform base and fittings at Ealing Broadway is of similar composition to that on locomotive 1007, but the evidence is not conclusive.
2. Samples of paint obtained from the first and second point rods came from the battery box cover of 1007.

Printed in Scotland by Her Majesty's Stationery Office at HMSO Press, Edinburgh
Dd 288495 K7 2/75 (11917)

# DERAILMENT NEAR WEST EALING – WESTERN REGION ON 19th DECEMBER 1973

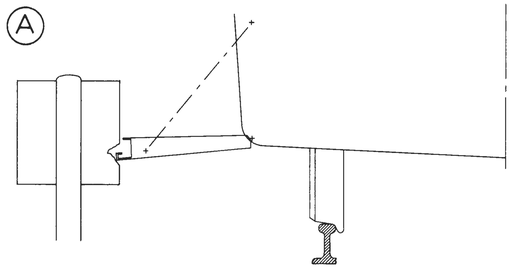


'Limit of Shunt' sign
at Old Oak Common

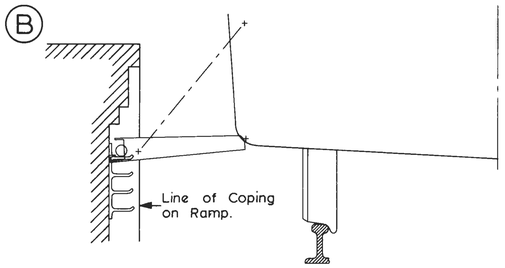


Platform Edge
at Ealing Broadway

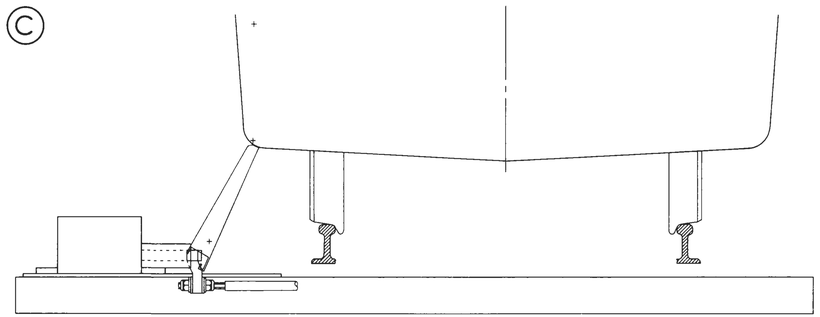


Point Machine
at Longfield Avenue

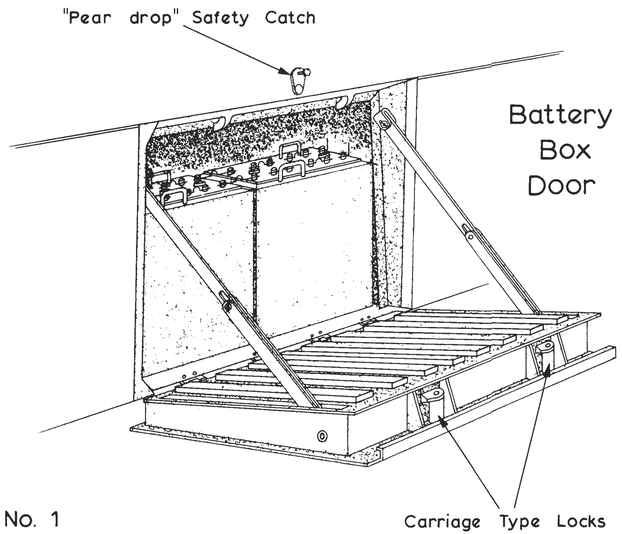


DRAWING No. 1

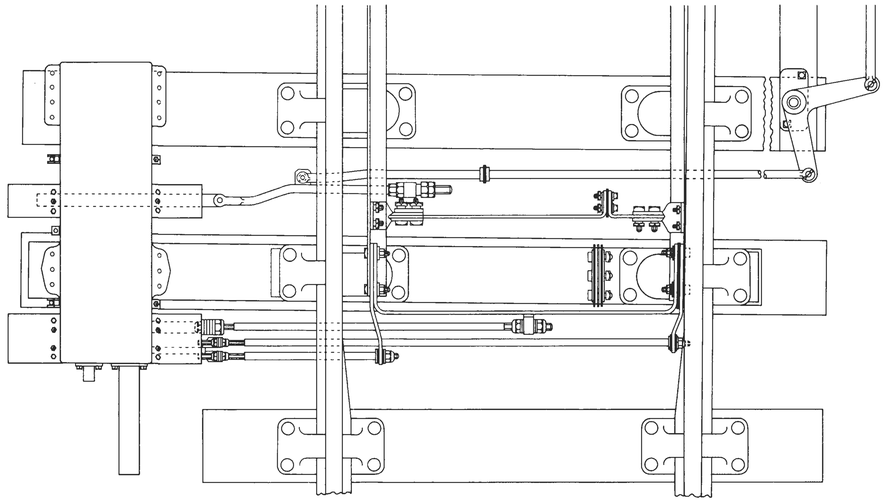

Plan

135070 Dd.288495 11/74 M.F.P.

# DERAILMENT NEAR WEST EALING – WESTERN REGION ON 19th DECEMBER 1973

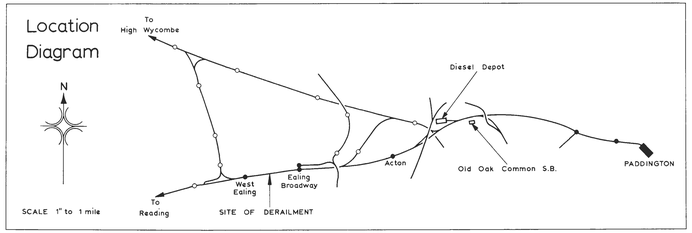


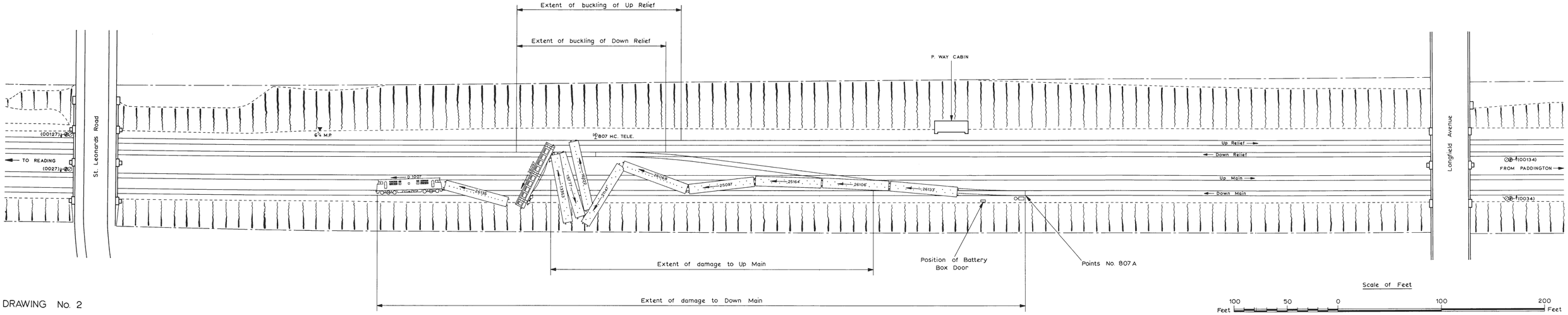


DRAWING No. 2

135070 Dd 288495 11/74 M.F.P.

© *Crown copyright* 1974

HER MAJESTY'S STATIONERY OFFICE

*Government Bookshops*

49 High Holborn, London WC1V 6HB
13a Castle Street, Edinburgh EH2 3AR
41 The Hayes, Cardiff CF1 1JW
Brazennose Street, Manchester M60 8AS
Southey House, Wine Street, Bristol BS1 2BQ
258 Broad Street, Birmingham B1 2HE
80 Chichester Street, Belfast BT1 4JY

*Government Publications are also available through booksellers*

ISBN 0 11 550356 0